JIA JU ROCKING STOOL

SKU: SS2016F003

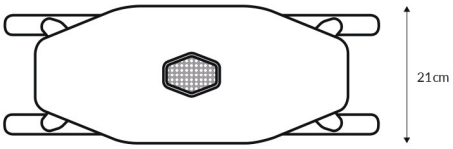

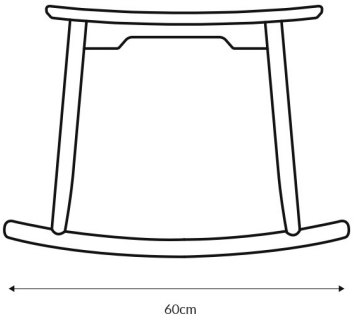

Designer: SCENE SHANG

Inspired by the simple beauty of, first, a stool - an elementary and utterly mobile home furniture, and the memory of retro rocking rattan horses from childhood. The rocking stool can be used as a dining stool or sat astride like a rocking horse. As children, we all build memories during play, and perhaps, even build emotional bonds with furniture that we recall on with fondness.

Winner of ASEAN Furniture Design Competition 2018 and International Furniture Fair Singapore Design Stars 2016.

Dimensions: L60 x W21 x H42 cm

Primary Material: Wood
Available Variants: Primary Color:
Customization: This product is not customizable.

This information has been provided by the supplier for guidance only. Vermillion is not responsible for the accuracy of this information or for the installation of the product using these notes. For more information, samples, or customizations, please contact cs@vermillionlifestyle.com.

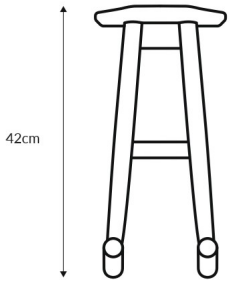

This information has been provided by the supplier for guidance only. Vermillion is not responsible for the accuracy of this information or for the installation of the product using these notes. For more information, samples, or customizations, please contact cs@vermillionlifestyle.com.